AXGX75 Specifications

Parameter	Min.	Typ.	Max.	Unit	Condition
Frequency range	950		1532	MHz	
Standard frequencies	1030.000 / 1090.000			MHz	
Frequency stability					
Initial tolerance at delivery			±10	ppm	@ +25 °C
vs. operating temperature range			±30	ppm	
Long term (aging) per year			±5	ppm	
Gate function (optional)	Option 1				
Low level input voltage V_{GL}		0	1.5	V	
High level input voltage V_{GH}	3.5	5.0	5.5	V	
Input resistance	10			kΩ	
Input capacitance		5	10	pF	
Turn-on time		30	40	ns	
Turn-off time		10	30	ns	
RF output					
Signal waveform	Sine wave				
Load R_L		50		Ω	
Output level gate ON	+10	+12		dBm	@ V_{GATE} > +3.5 V
Output level gate OFF			−50	dBm	@ V_{GATE} < +1.5 V
Sub-harmonics (multiples of f_{OUT}/10)		−40	−30	dBc	(Note 2)
Harmonics		−40	−30	dBc	
Supply voltage V_S	11.4	12.0	12.6	V	
Current consumption					
Gate ON		42	50	mA	@ V_{GATE} > +3.5 V
Gate OFF		7	15	mA	@ V_{GATE} < +1.5 V
Operating temperature range	−40		+70	°C	
Enclosure (L × W × H)	25.8 × 25.8 × 12.7 max.			mm	IEC 60679-3 CO 43
Weight		20		g	
Packing	Palette				

Notes: 1. Terminology and test conditions are according to IEC 60679-1 and MIL-PRF-55310, unless otherwise stated
2. Depending on frequency multiplication factor may be higher than 10

Absolute Maximum Ratings

Parameter	Min.	Max.	Unit	Condition
Supply voltage V_S	−0.5	V_S + 10%	V	V_S to GND
Gate voltage V_{GATE}	−0.5	7.0	V	V_{GATE} to GND
Storage temperature	−55	+125	°C	

Phone: +31 (0)20 8932140
Email: sales@fcd-tech.com
Website: www.fcd-tech.com

Ordering Code

Model	Option 1 [Gate function]	Revision	Frequency [MHz]
AXGX75	G = with gate function Blank = no gate function	Rev.2	1030.000
Example: AXGX75G_Rev.2 – 1030.000 MHz			

Outline Dimensions & Pin Connections (mm)

Enclosure drawing

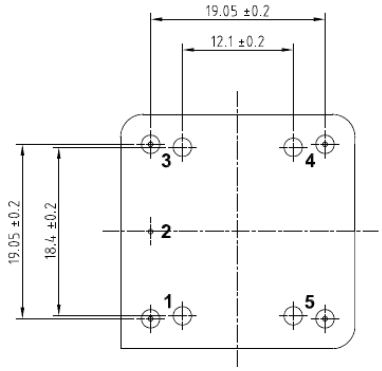

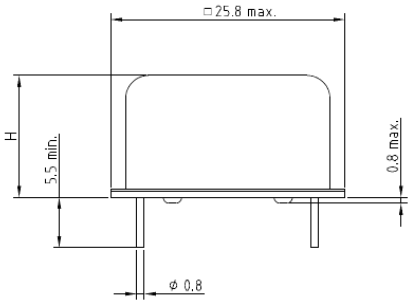

Pin connections

Pin #	Symbol	Function
1	RF OUT	RF output
2	GND	Ground
3	V_{GATE}	Gate input or N.C.
4	N.C.	No connection
5	V_S	Supply voltage

Environmental Conditions						
Test	**IEC 60068 Part**	**IEC 60679-1 Clause**	**MIL-STD-202G Method**	**MIL-STD-810F Method**	**MIL-PRF-55310D Clause**	**Test conditions (IEC)**
Sealing tests (if applicable)	2-17	5.6.2	112E		3.6.1.2	Gross leak: Test Qc, Fine leak: Test Qk
Solderability	2-20	5.6.3	208H		3.6.52	Test Ta Method 1
Resistance to soldering heat	2-58		210F		3.6.48	Test Td1 Method 2 Test Td2 Method 2
Shock*	2-27	5.6.8	213B	516.4	3.6.40	Test Ea, 3 x per axis 100 g, 6 ms half-sine pulse
Vibration, sinusoidal*	2-6	5.6.7.1	201A 204D	516.4-4	3.6.38.1 3.6.38.2	Test Fc, 30 min per axis, 10 Hz – 55 Hz 0.75 mm; 55 Hz – 2 kHz, 10 g
Vibration, random*	2-64	5.6.7.3	214A	514.5	3.6.38.3 3.6.38.4	Test Fdb
Endurance tests			108A			
– Ageing		5.7.1			4.8.35	30 days @ 85 °C, OCXO @ 25 °C
– Extended ageing		5.7.2				1000 h, 2000 h, 8000 h @ 85 °C
Other environmental conditions on request.						

Disclaimer

FCD-Tech B.V. reserves the right to make changes to the product(s) and/or information contained herein without notice. No liability is assumed as a result of their use or application. No rights under any patent accompany the sale of any such product(s) or information.